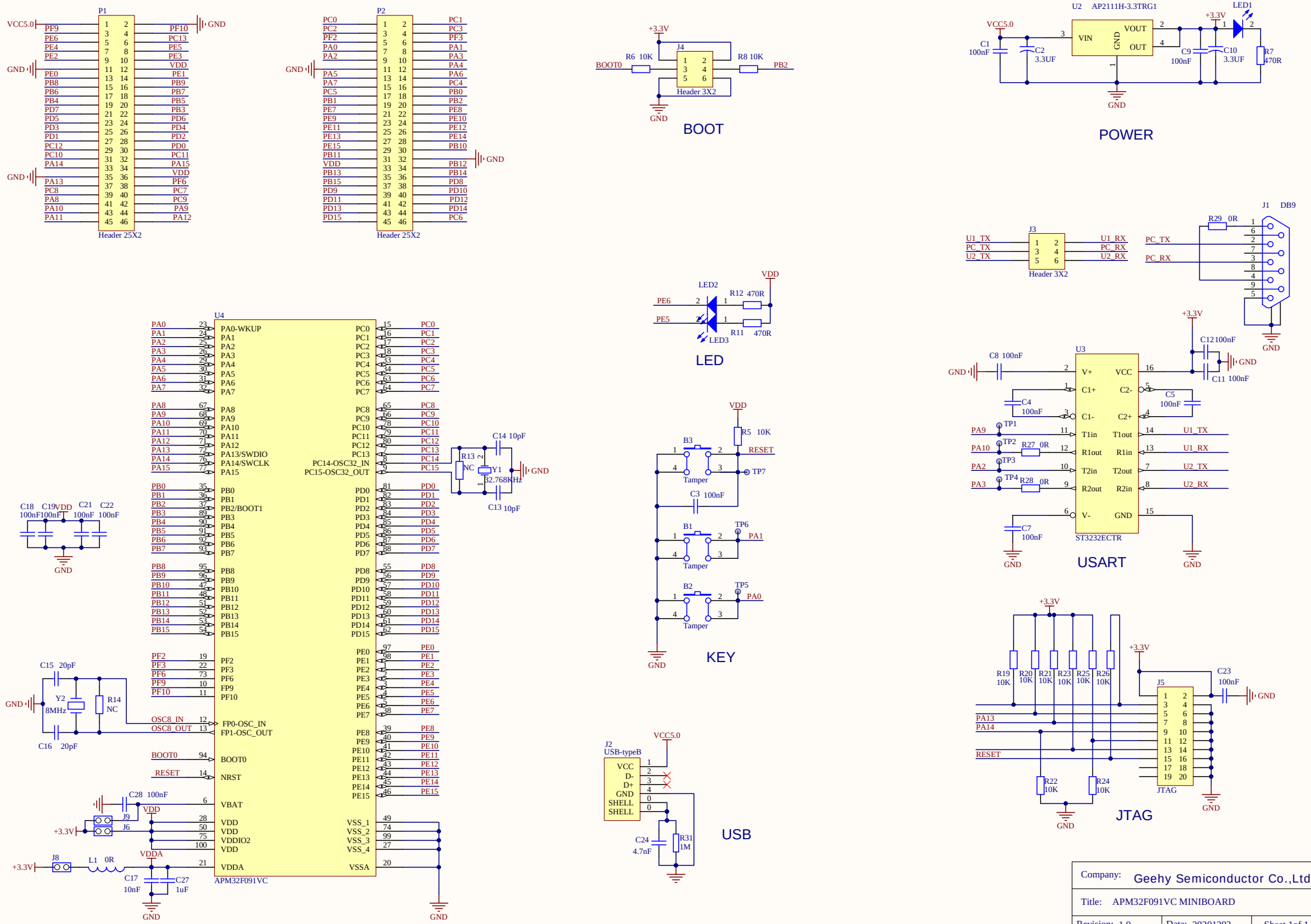
P1
Header 25X2
P2
Header 25X2
BOOT
J4
Header 3X2
R6 10K
R8 10K
BOOT0
PB2
POWER
U2 AP2111H-3.3TRG1
VIN
VOUT
GND
OUT
C1 100nF
C2 3.3UF
C9 100nF
C10 3.3UF
R7 470R
LED1
+3.3V
VCC5.0
LED
LED2
LED3
R12 470R
R11 470R
PE6
PE5
VDD
USART
J3
Header 3X2
U1_TX
PC_TX
U2_TX
U1_RX
PC_RX
U2_RX
J1 DB9
R29 0R
U3
ST3232ECTR
C8 100nF
C11 100nF
C12 100nF
C4 100nF
C5 100nF
C7 100nF
R27 0R
R28 0R
PA9
PA10
PA2
PA3
TP1
TP2
TP3
TP4
KEY
R5 10K
RESET
TP7
B3
B1
B2
Tamper
C3 100nF
TP6
TP5
PA1
PA0
USB
J2 USB-typeB
VCC
D-
D+
GND
SHELL
C24 4.7nF
R31 1M
JTAG
J5
R19 10K
R20 10K
R21 10K
R23 10K
R25 10K
R26 10K
R22 10K
R24 10K
C23 100nF
PA13
PA14
RESET
U4
APM32F091VC
PA0-WKUP
PA13/SWDIO
PA14/SWCLK
PB2/BOOT1
PC14-OSC32_IN
PC15-OSC32_OUT
FP0-OSC_IN
FP1-OSC_OUT
OSC8_IN
OSC8_OUT
BOOT0
NRST
VBAT
VDDIO2
VDDA
VSSA
C14 10pF
C13 10pF
R13 NC
Y1 32.768KHz
C15 20pF
C16 20pF
Y2 8MHz
R14 NC
C18 100nF
C19 100nF
C21 100nF
C22 100nF
C28 100nF
J9
J6
J8
L1 0R
C17 10nF
C27 1uF
Company: Geehy Semiconductor Co.,Ltd.
Title: APM32F091VC MINIBOARD
Revision: 1.0
Data: 20201203
Sheet 1of 1