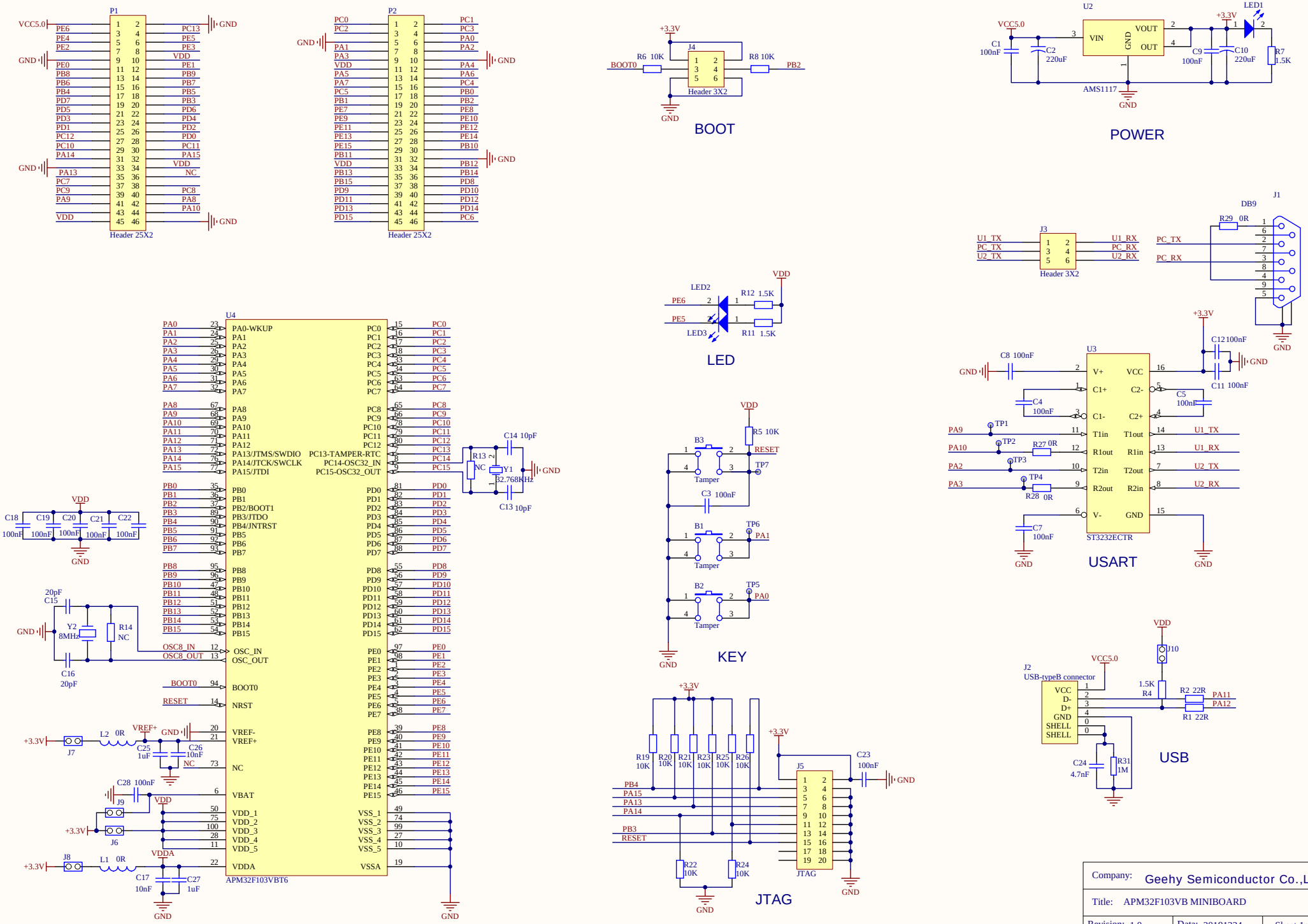
P1
Header 25X2
P2
Header 25X2
BOOT
POWER
LED
KEY
USART
USB
JTAG
U4
APM32F103VBT6
U2
AMS1117
U3
ST3232ECTR
J1
DB9
J2
USB-typeB connector
Company: Geehy Semiconductor Co.,Ltd.
Title: APM32F103VB MINIBOARD
Revision: 1.0
Data: 20191224
Sheet 1of 1