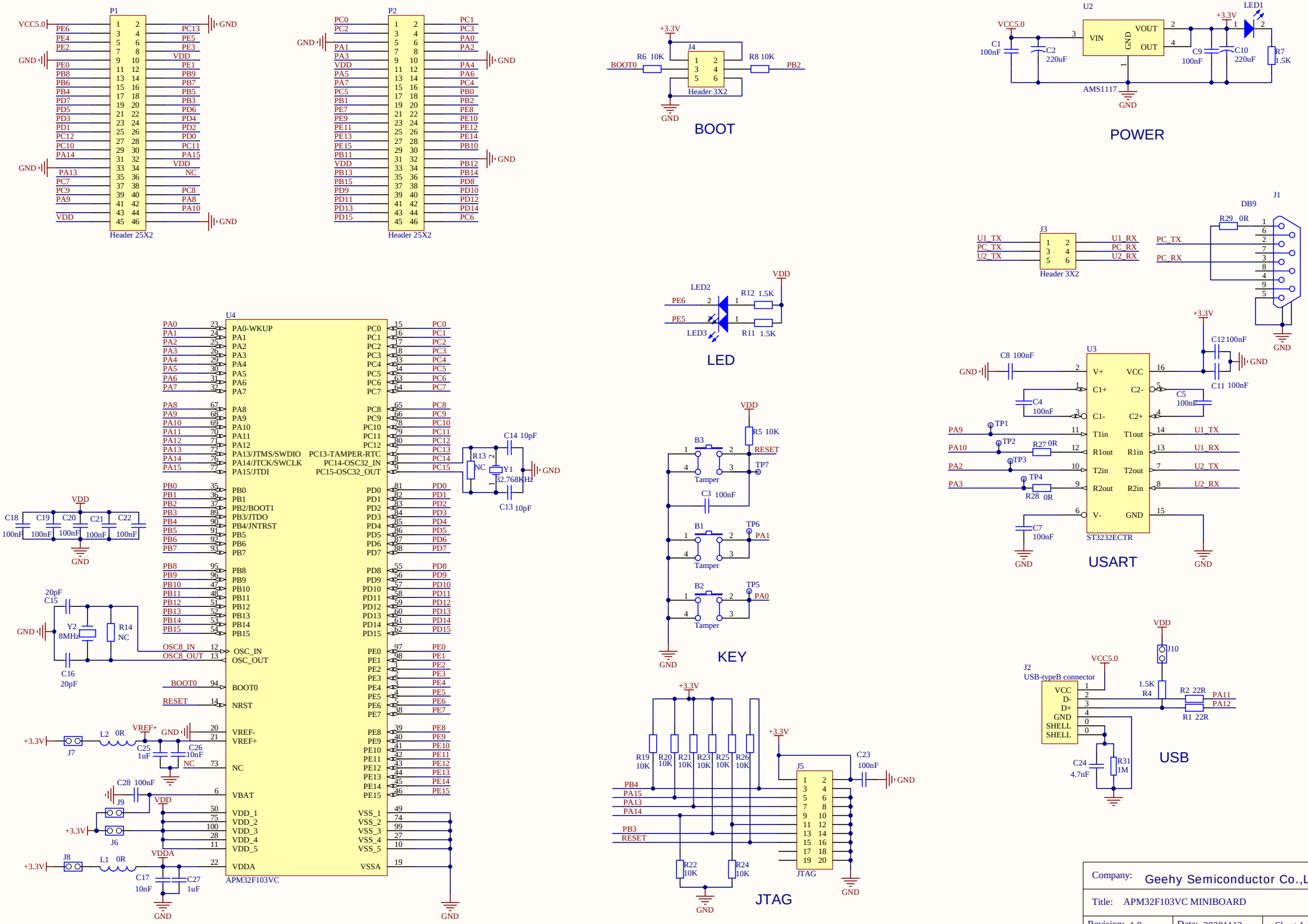

Company: Geehy Semiconductor Co.,Ltd.

Title: APM32F103VC MINIBOARD

Revision: 1.0 | Data: 20201112 | Sheet 1of 1