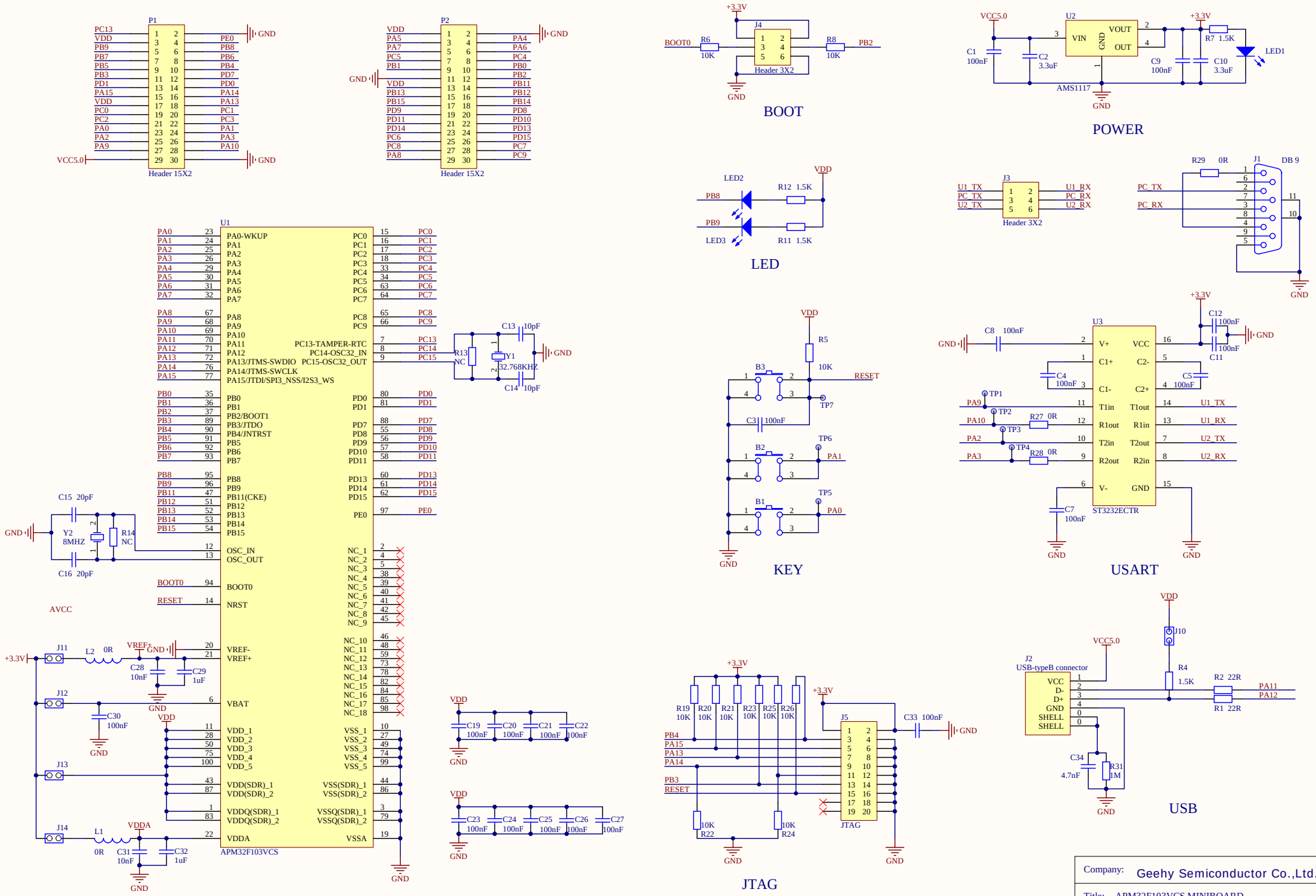
P1
Header 15X2
P2
Header 15X2
BOOT
POWER
LED
USART
KEY
JTAG
USB
U1
APM32F103VCS
U2
AMS1117
U3
ST3232ECTR
J1
DB 9
J2
USB-typeB connector
Company: Geehy Semiconductor Co.,Ltd.
Title: APM32F103VCS MINIBOARD
Revision: 1.0
Data: 20210622
Sheet 1of 1