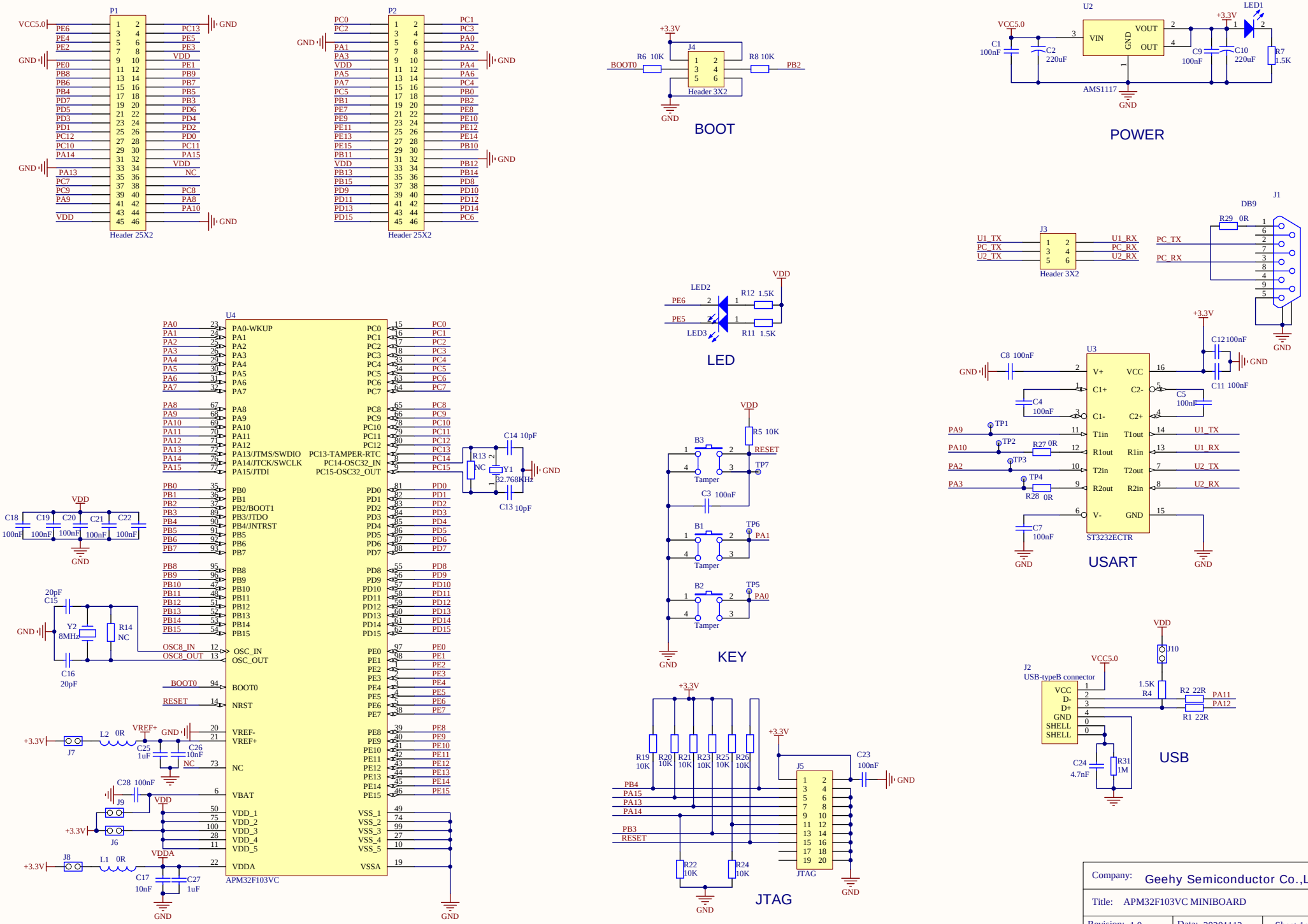
P1
Header 25X2
P2
Header 25X2
BOOT
POWER
U2
AMS1117
LED1
J1
DB9
J3
Header 3X2
LED
U4
APM32F103VC
U3
ST3232ECTR
USART
KEY
JTAG
J2
USB-typeB connector
USB
Company: Geehy Semiconductor Co.,Ltd.
Title: APM32F103VC MINIBOARD
Revision: 1.0
Data: 20201112
Sheet 1of 1