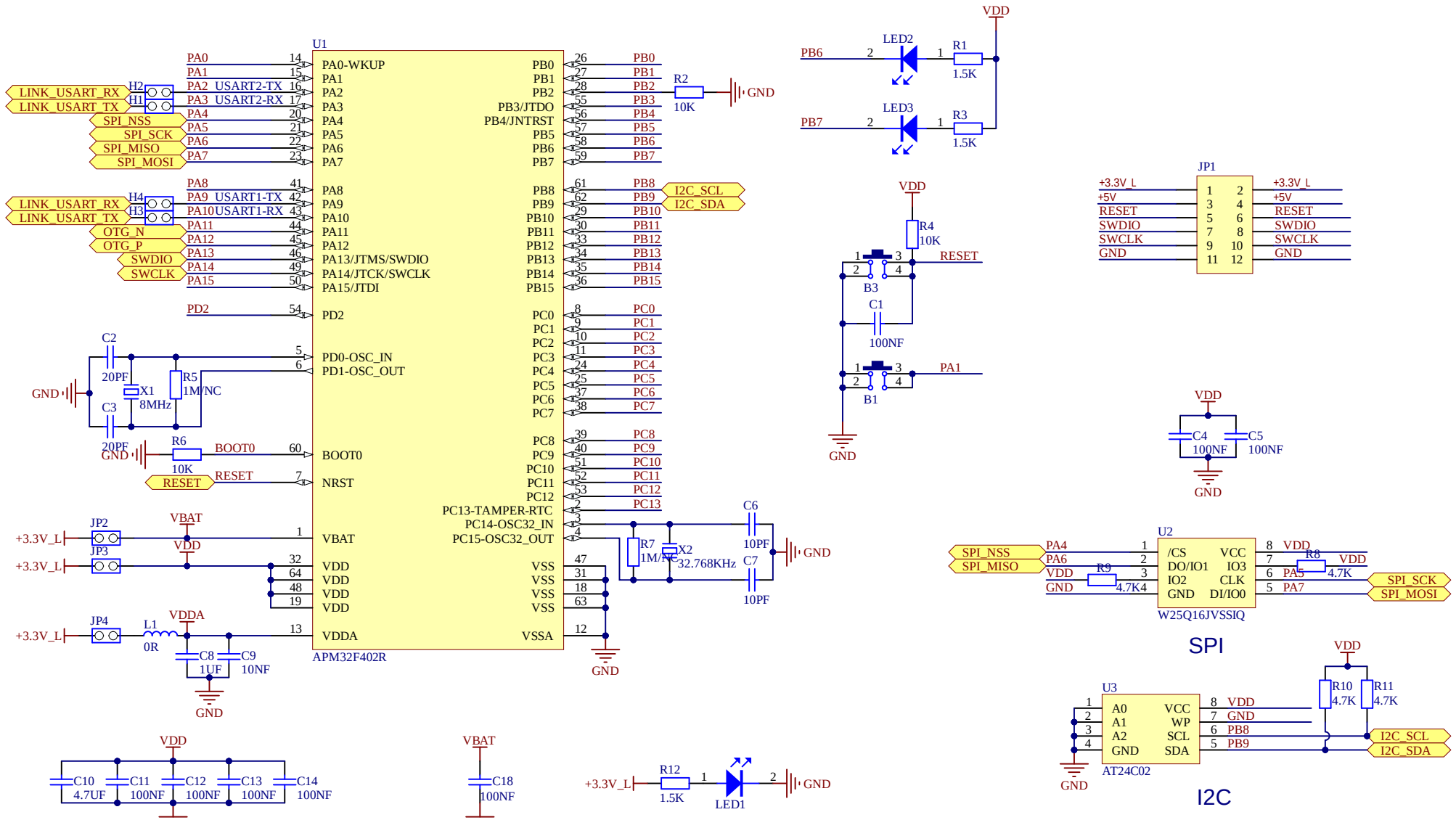

Geehy	ProjectName	APM32F402R Micro-EVB V1.0	
	DocumentName	Minisystem.SchDoc	
	Page Number	1/2	Date 2025/6/11

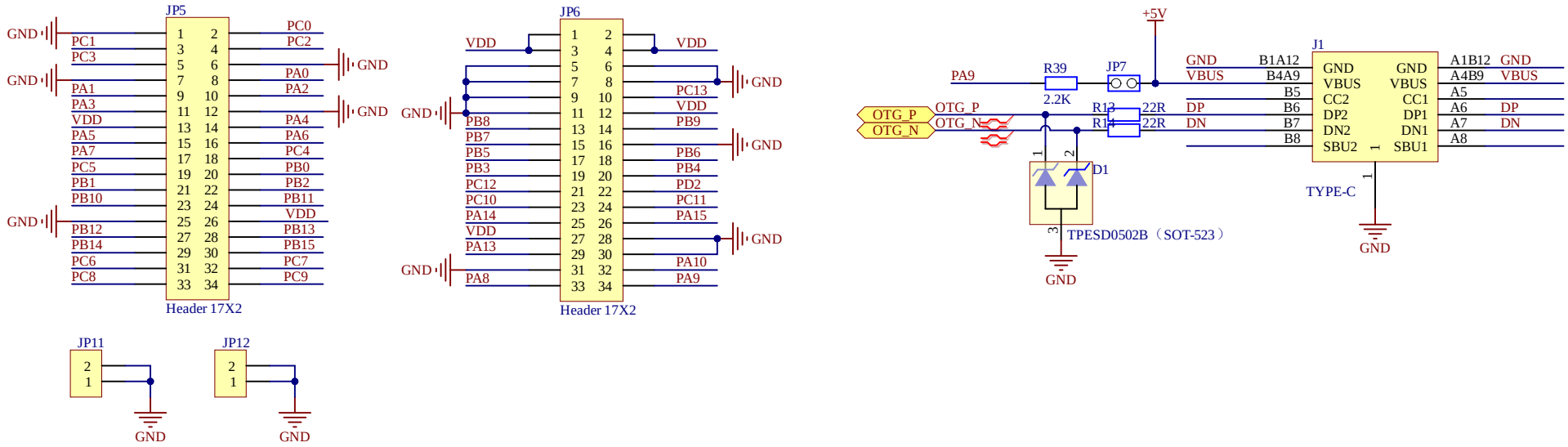

Geehy	ProjectName	APM32F402R Micro-EVB V1.0	
	DocumentName	Power.SchDoc	
	Page Number	2/2	Date 2025/6/11