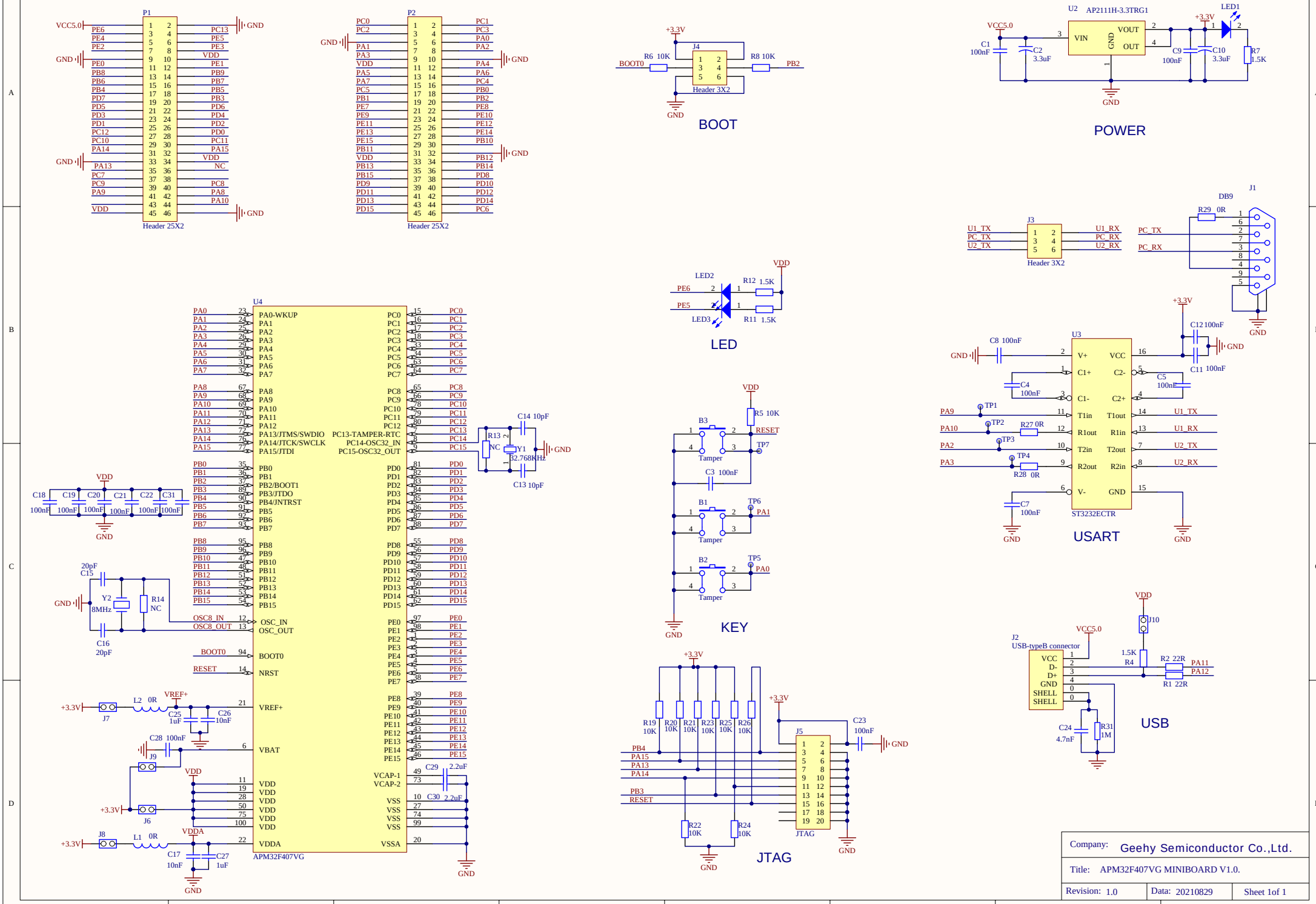
P1
Header 25X2
P2
Header 25X2
BOOT
J4
Header 3X2
R6 10K
R8 10K
BOOT0
PB2
POWER
U2 AP2111H-3.3TRG1
VIN
VOUT
OUT
GND
VCC5.0
C1 100nF
C2 3.3uF
C9 100nF
C10 3.3uF
LED1
R7 1.5K
+3.3V
LED
LED2
LED3
R12 1.5K
R11 1.5K
VDD
PE6
PE5
USART
J3
Header 3X2
U1_TX
PC_TX
U2_TX
U1_RX
PC_RX
U2_RX
DB9
J1
R29 0R
U3
ST3232ECTR
V+
VCC
C1+
C2-
C1-
C2+
T1in
T1out
R1out
R1in
T2in
T2out
R2out
R2in
V-
GND
C8 100nF
C4 100nF
C5 100nF
C12 100nF
C11 100nF
C7 100nF
R27 0R
R28 0R
TP1
TP2
TP3
TP4
PA9
PA10
PA2
PA3
U1_TX
U1_RX
U2_TX
U2_RX
KEY
B3
B1
B2
Tamper
R5 10K
RESET
TP7
TP6
PA1
TP5
PA0
C3 100nF
JTAG
J5
JTAG
R19 10K
R20 10K
R21 10K
R23 10K
R25 10K
R26 10K
R22 10K
R24 10K
C23 100nF
PB4
PA15
PA13
PA14
PB3
RESET
USB
J2
USB-typeB connector
VCC
D-
D+
GND
SHELL
SHELL
J10
R4 1.5K
R2 22R
R1 22R
PA11
PA12
C24 4.7nF
R31 1M
U4
APM32F407VG
PA0-WKUP
PA1
PA2
PA3
PA4
PA5
PA6
PA7
PA8
PA9
PA10
PA11
PA12
PA13/JTMS/SWDIO
PA14/JTCK/SWCLK
PA15/JTDI
PB0
PB1
PB2/BOOT1
PB3/JTDO
PB4/JNTRST
PB5
PB6
PB7
PB8
PB9
PB10
PB11
PB12
PB13
PB14
PB15
OSC_IN
OSC_OUT
BOOT0
NRST
VREF+
VBAT
VDD
VDDA
VSS
VSSA
VCAP-1
VCAP-2
PC13-TAMPER-RTC
PC14-OSC32_IN
PC15-OSC32_OUT
C14 10pF
C13 10pF
R13 NC
Y1 32.768KHz
C18 100nF
C19 100nF
C20 100nF
C21 100nF
C22 100nF
C31 100nF
20pF C15
Y2 8MHz
R14 NC
C16 20pF
OSC8_IN
OSC8_OUT
BOOT0
RESET
L2 0R
C25 1uF
C26 10nF
C28 100nF
J7
J9
J6
J8
L1 0R
C17 10nF
C27 1uF
C29 2.2uF
C30 2.2uF
Company: Geehy Semiconductor Co.,Ltd.
Title: APM32F407VG MINIBOARD V1.0.
Revision: 1.0
Data: 20210829
Sheet 1of 1